PINHOLE" PHOTOGRA

The

NEW PHOTO-MINIAT

OLD SERIES: No 208

NEW SERIES: No 3

PRICE 40 CENTS

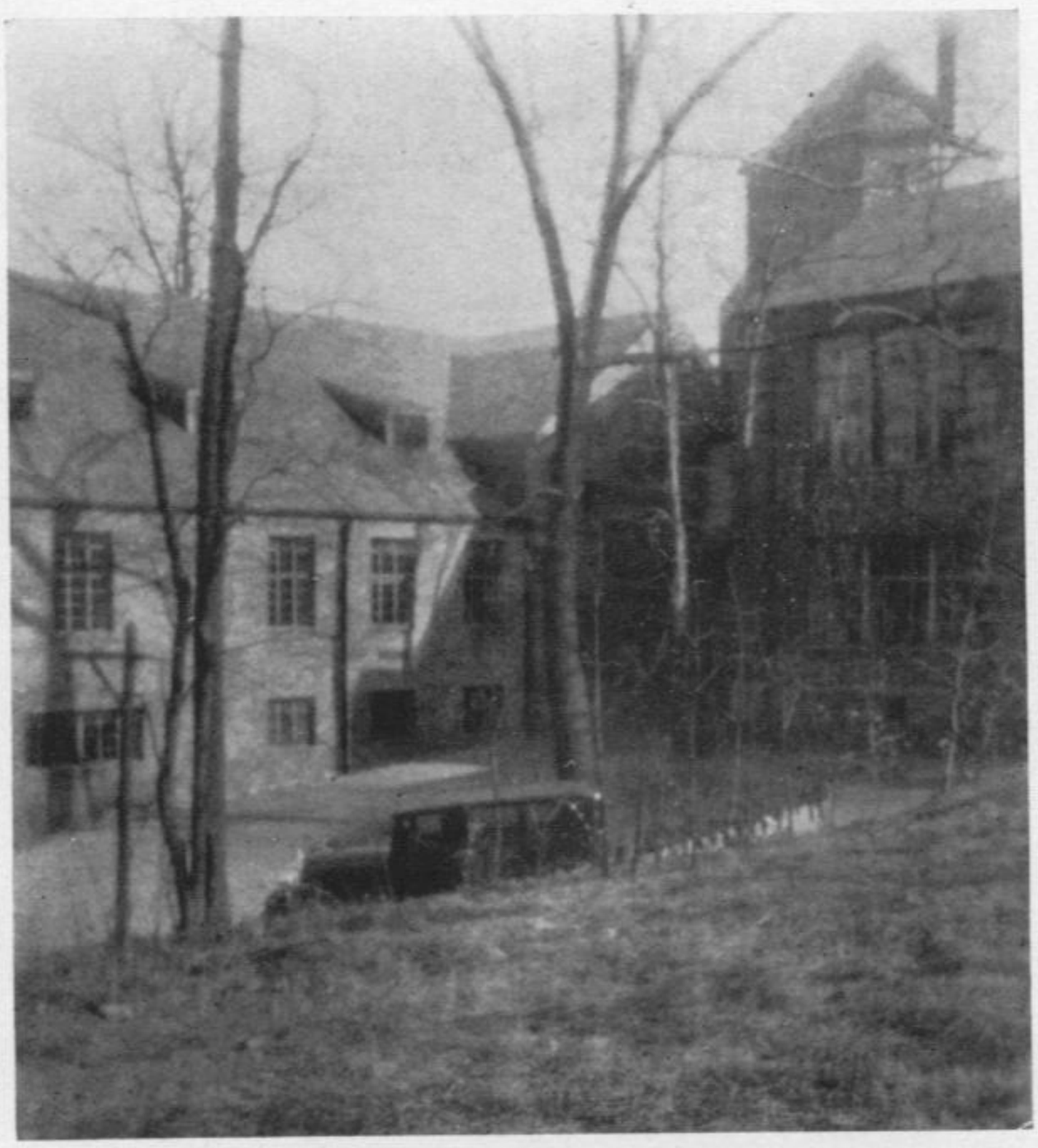

TOWER, FIELDSTON SCHOOL, NEW YORK
Made with an Eastman Pinhole Camera, No. 10 paper pinhole.
M. E. Munzer

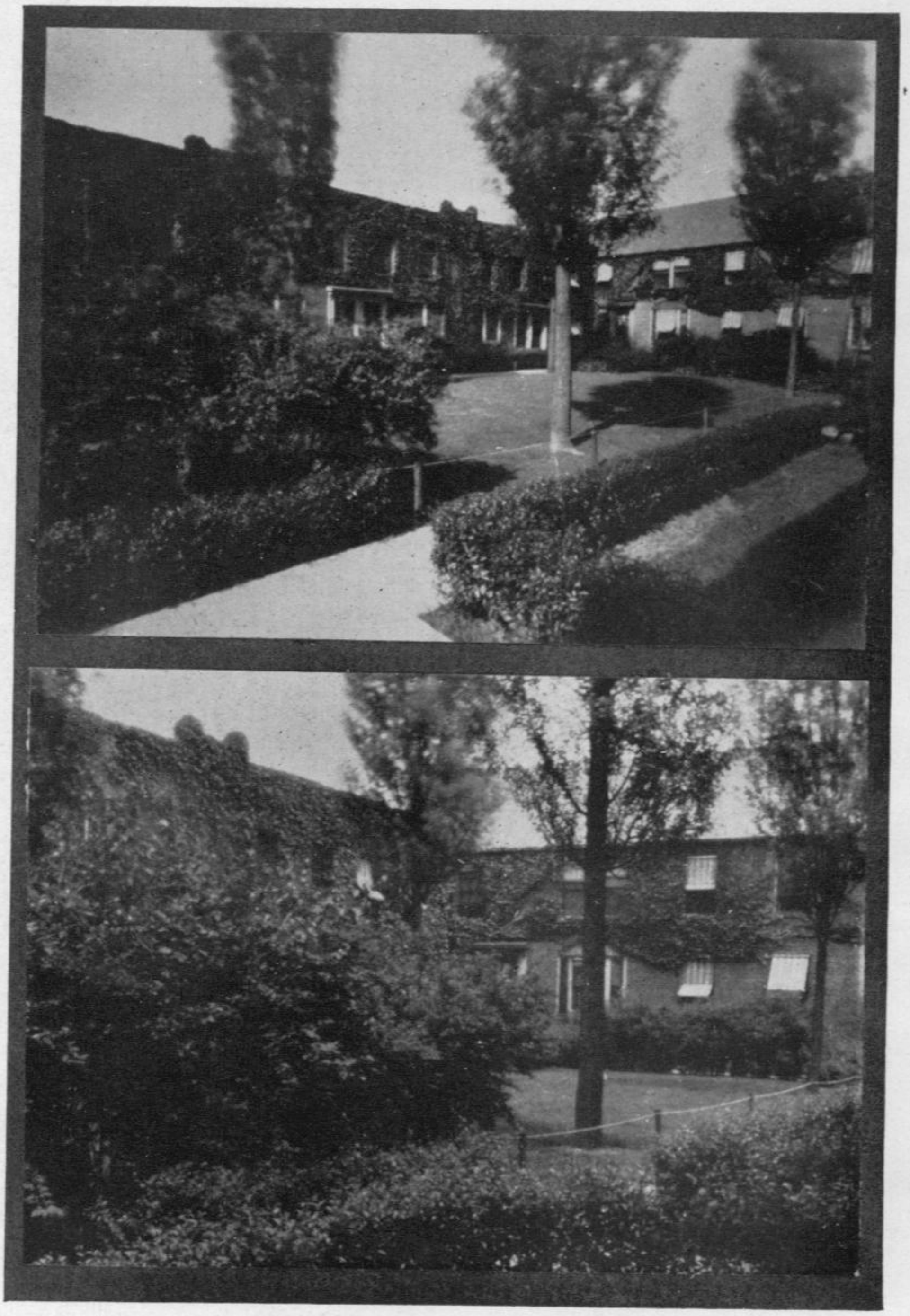

PINHOLE TO FILM DISTANCE

Top: 4¼″ plate, pinhole distance 1½″, angle shown 110°.
Bottom: Almost same viewpoint, 4¼″ plate, pinhole distance 5½″, angle shown 40°.

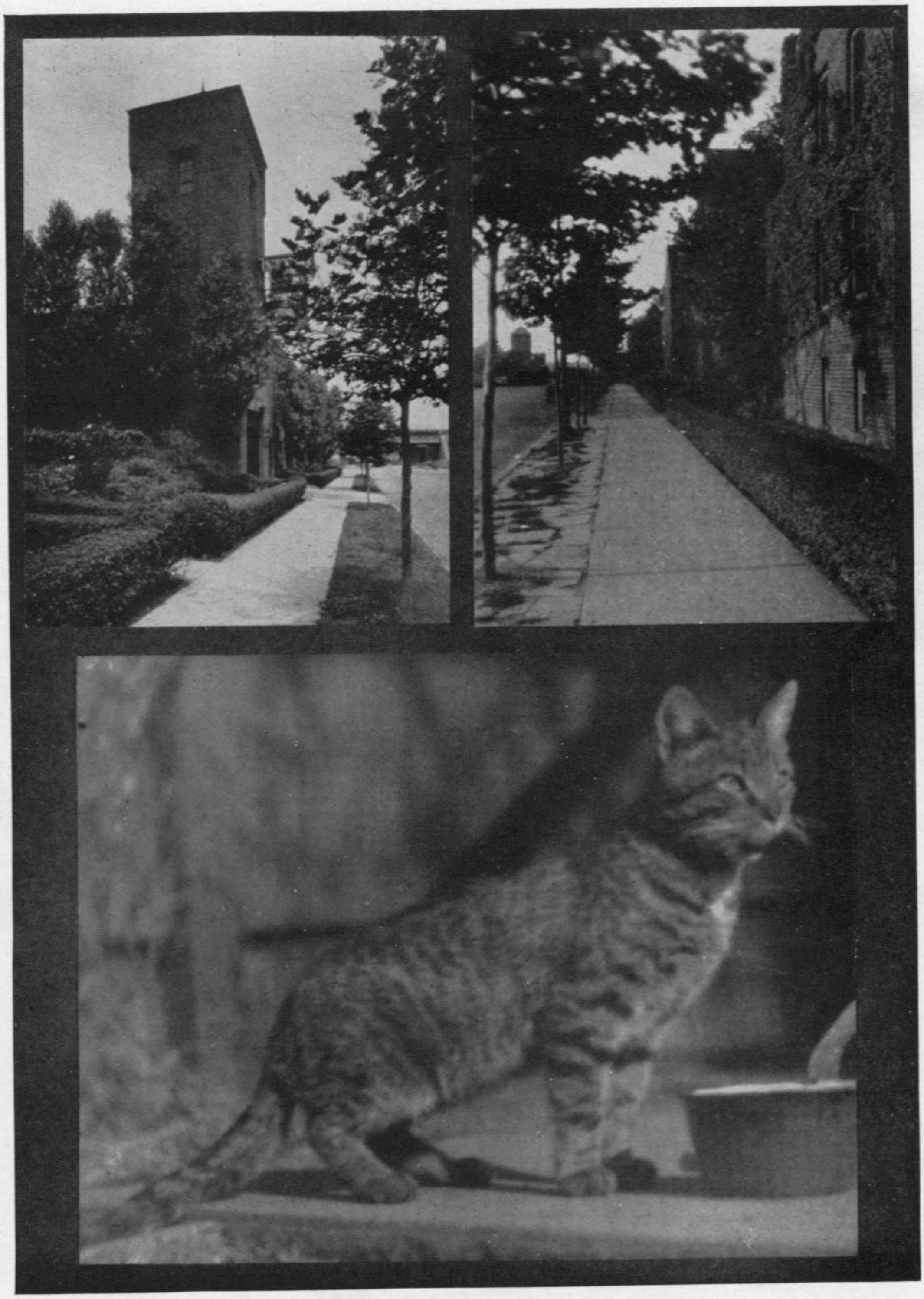

VARIOUS EXAMPLES

Top Left: Camera very near tower, vertical angle about 110°.
Top Right: Several moving pedestrians and automobiles in field of view eliminated by comparatively long exposure.
Bottom: Enlargement two diameters from sharp lens negative with No. 10 pinhole.

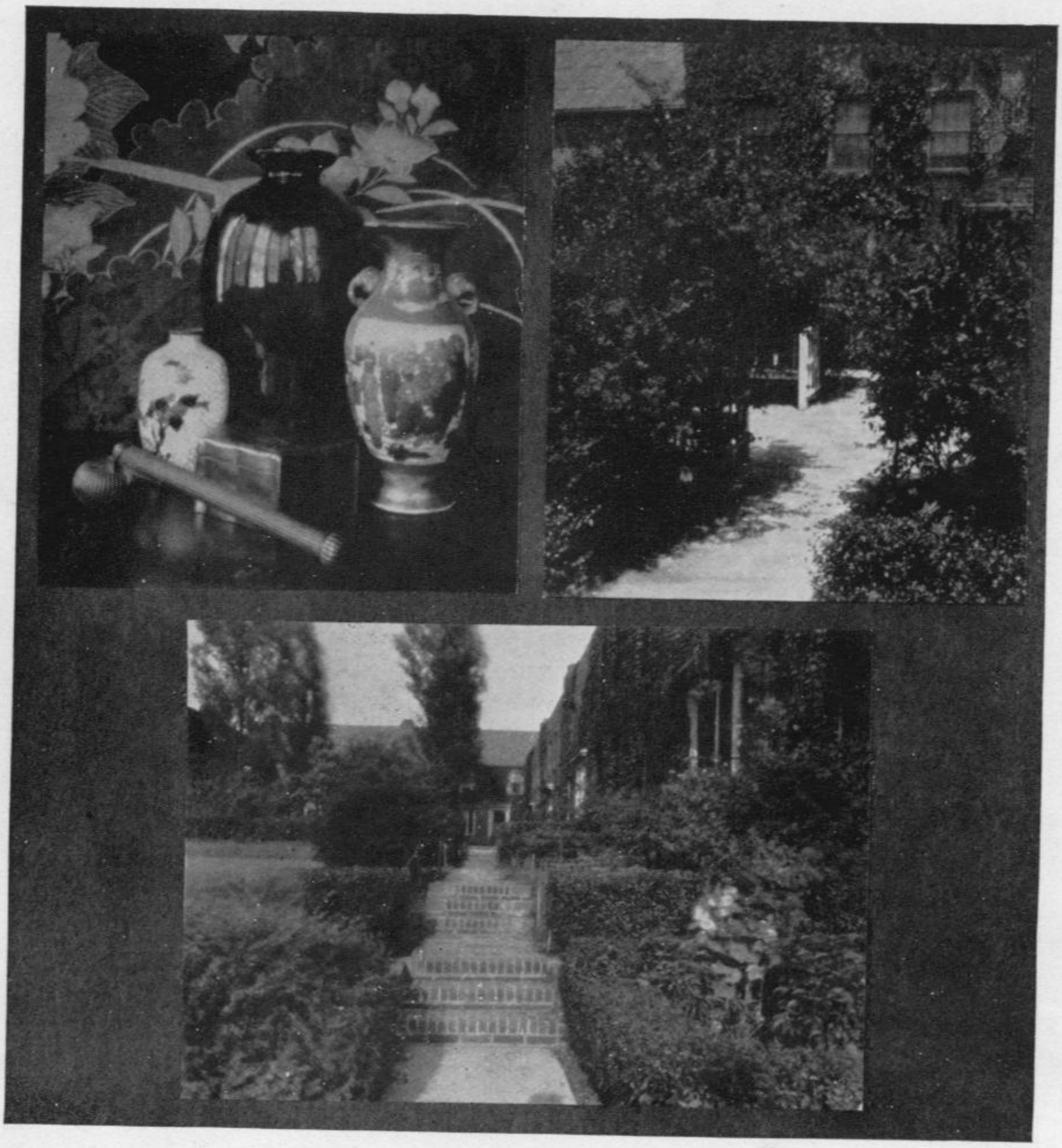

DEPTH OF FIELD

Top Left: Nearest object 14″ from pinhole, background 36″ from pinhole.
Top Right: Nearest shrubbery 3′ from camera, back wall 50′.
Bottom: Nearest shrubbery 4′ from camera, back wall 150′, angle 80°.

(The foregoing illustrations were specially made by the author to illustrate points in the text. No. 10 and No. 12 pinholes were used and the exposures were all determined by means of a "Dremoscop" exposure meter and the simplified formula given on page 146.)

PINHOLE PHOTOGRAPHY

OF the beginnings of pinhole photography we do not know a great deal. Of course, for many years before lenses were used for the purpose, observers knew that images were formed on the walls of darkened chambers by light passing through a small aperture in one of the walls or in a window shutter. It was also observed that the spots of light in the shadows of trees were round, and during a partial eclipse, crescent shaped, and it was understood that these spots of light were really images of the sun formed by rays of light passing through the comparatively small interstices formed by overlapping leaves. Aristotle understood this and commented on it, and demonstrated the truth of it by showing that the spot of sunlight on the wall of a darkened chamber formed by the sun's rays passing through a tiny aperture in the window shutter was round, though the aperture in the shutter through which the light came was square or irregular in shape. The spot of light was simply the projected image of the sun's disk. Euclid, the geometrician, actually demonstrated the projection of images on the wall of a darkened room, of what was happening on the outside, by light passing through a small aperture in the window shutter.

So the principles underlying image projection by light and the formation of images by passing light through small apertures were known and described in remote times, but the first actual photography, the *impression* of a projected light image on a sensitized surface was with a lens camera and quite necessarily so. The first sensitized materials were extremely slow, only feebly sensitive to light, and the light gathering and refracting power of the lens was needed to impress the feebly sensitive surface. The image formed by isolating the very limited pencil of light rays with the small aperture rather than the gathering of a number of pencils to a point or focus was entirely too weak to make a chemical impression within any reasonable time.

Nevertheless, the editor of the *Amateur Photographer* some years ago called attention to the following quotation from a book called: "The Stereoscope: Its History" by Sir David Brewster, published in 1856, which synchronizes experiments in pinhole photography with the earlier lens efforts:

"The Rev. Mr. Egerton and I have obtained photographs of a bust, in the course of ten minutes, with a very faint sun, and through an aperture less than the hundredth (?) of an inch; and I have no doubt that when chemistry has furnished us with a material more sensitive to light, a camera without lenses, and with only a *pinhole* will be the favorite instrument of the photographer."

I INTRODUCTORY

There is not much literature on the subject of pinhole photography to be found until the early eighties of the last century. From then on until early in the twentieth century, the subject gathered more and more interest until in 1905 or 1906 hardly a month passed without a magazine article or two about pinhole photography, and several worthy pinhole devices were on the market. Two numbers of the old series of THE PHOTO-MINIATURE, Nos. 27 and 70, both now out of print, remain as monumental contributions to the subject.

NAME CONTROVERSY

From the beginning there was much controversy as to the name "Pinhole Photography." The aperture used being made with a needle, usually, the name "Needle-hole Photography" was suggested; the image being formed without aid of a lens, "Lensless Photography" was advocated; the image formed being absolutely mathematically true, all straight lines being rendered straight, "Rectigraphic Photography" was urged by one of its earliest and most enthusiastic workers, the Rev. J. B. Thomson, author of THE PHOTO-MINIATURE: No. 27: "Stenopaic Photography" was also suggested, but as "stenopaic" refers to a small aperture in slit form, it has to my mind no place in the discussion.

I prefer the old name of "Pinhole Photography." "Pinhole" in the English language, both British and American, means a minute puncture either made by a pin or *as if made* by a pin, and whether the puncture is in our most cherished negative, the bellows of our best camera, or in a piece of thin paper, or metal, or whatever else at the business end of a device used for *la photographie sans objectif,* as the French so lucidly describe it, a pinhole it is, and always will be, even if made with a needle. There is something homely and honestly descriptive about "Pinhole Photography." With all its other virtues and some faults, pinhole photography always has the supreme virtue of extreme simplicity, so let us stick to the simple name.

VIRTUES AND FAULTS

With the many virtues of pinhole photography there has always been mixed one great deterring fault, the length of exposure required, with all the limitations of subject and possibilities due to the necessity of long exposure. With the development of the new sensitized materials whose sensitivity to light is many times that of the product of only a few years ago, the length of exposure necessary for making a pinhole photograph can be very markedly cut down and even the possibility of the slower snap-shots is in sight.

Although I have seen excellent and intriguing 3¼" x 4¼" pinhole photographs, the best quality pinhole photography is essentially a large-negative process at the opposite extreme of the present vogue for miniature negative making, with which, strange as it may seem, no one can be more in sympathy and enthusiastic about than the writer.

By no other process can there be made comparatively huge negatives with such a charming quality of atmospheric softness, not fuzziness, as by the pinhole method, and with apparatus so amazingly simple and, if desired, so amazingly inexpensive that the apparatus for five by seven and larger negatives, eight by ten is a most effective size, need cost no more than do two or three of the films used, and a little labor.

It is this possibility of pinhole photography, the easy making of exhibition size negatives of superb pictorial quality, from which prints by any process, platinum, chloride, bromide, gum, oil, Bromoil or any other, may be made directly, which merits the attention of sincere pictorialists. It is in the hope of interesting pictorialists, in this unique quality of the pinhole photograph rather than in its cheapness, simplicity and flexibility that this brochure is prepared, although the cheapness, simplicity and flexibility of pinhole photography are certainly not to be despised.

Furthermore, we hope to call attention again to the things which may be done better with the pinhole than with the lens, some of which, in fact, can be done only with a pinhole, making it an instrument which is not to be despised even by the professional.

II THEORY

Objects are seen by the light reflected from them. Every point on the object reflects an infinite number of rays of light in every direction. A lens gathers a few of these reflected rays and by its power of refraction bends or focuses them to meet in a point again; this meeting point is the image of the point from which the rays were originally reflected;

the images of all the points on the object taken together form an image of the object at the so-called focal plane, and nowhere else. With a simple uncorrected lens the images of the several points on the object are all the same distance from the center of the lens and lie not on a plane, but on a portion of a spherical surface whose radius is the focal length of the lens. By using a combination of several lenses, made of glass of varying refracting power, the normal focusing power of the lens can be so distorted that the image points will be formed at varying distances from the center of the lens and approximately on a plane. This distortion of the lens is called spherical correction and at one and the same time provides rectilinear correction. With the uncorrected lens, images of straight lines, especially near the edges, are necessarily curved, the projections on the flat picture plane of the images on the spherical focal surface; with the corrected lens with its plane focal surface these images obviously become straight.

We cannot go more deeply into the interesting theory of optics; merely enough has been given to make plain the great superiority in rectilinear accuracy and universality of definition in images formed by tiny apertures used instead of lenses.

SUPERIORITY OVER LENS

Instead of gathering a comparatively large number of light rays reflected from a point on the object and bending them together at the focal plane to form an image of the reflecting point, the small aperture or pinhole limits the number of reflected light rays allowed to pass to the picture plane, to a very narrow pencil somewhat less than its own diameter in width. This narrow pencil of light casts a tiny circle of light on the picture plane and this tiny circle of light is the more or less diffused image of the original light reflecting point.

Herein lie the chief virtues and the chief faults of the pinhole. As the aperture must have tangible diameter, the image is necessarily composed of appreciable circles instead of points, these circles are diffused or blurred points and are called circles of diffusion. But this diffusion is practically uniform over the whole area of the picture plane. The distance of the object being so much greater than the diameter of the pinhole, the sides of the pencils of light rays passing through the pinhole are almost parallel and so the circle of diffusion does not vary perceptibly for variation in distance of picture plane from pinhole under ordinary working conditions; in other words, the pinhole is of universal "focus" in the broadest sense of the term and distance from aperture to picture or focal plane is varied only for control of size of image and angle of view, as will be explained later.

INFERIORITY TO LENS

But for the advantages of universal focus and flexible size of image and angle of view, we must make some sacrifices. We can never attain needle-like sharpness, but we do get uniform and very attractive atmospheric softness and an image which is absolutely true in drawing and free from astigmatism and all curvilinear distortion, and an image embracing any angle of view, and of any relative size we wish. We have infinite depth of focus and depth of field, but we must sacrific speed, a pinhole 1/50th of an inch in diameter, which is used five inches from our plate or film, normal for 3¼ x 4¼, has a rating of f/250 and will take about 1,000 times the exposure of a fast lens, but, as will be shown later, this is neither hopeless nor even much of a handicap in many instances.

FOR AND AGAINST THE PINHOLE

We may now sum up the case for and against pinhole photography:

The image is absolutely truthful, rectigraphic, free from all astigmatism, spherical and linear distortion, and absolutely flexible as to relative size and angle of view.

The definition is of practically uniform atmospheric softness to the edges of the picture, under all conditions of size and angle of view.

No focusing for definition is necessary. From one point with the same camera and the same pinhole, by increasing the distance between pinhole and film, enlarged images of the telephoto order may be obtained and by moving the pinhole near to the picture plane, wide angle images up to approximately 130 degrees may be obtained.

By virtue of extreme wide angles possible with the pinhole combined with universally good definition at any angle or distance, extreme rise of front is feasible and tall buildings on narrow streets and similar subjects entirely beyond the scope of lens photography may be photographed with a pinhole.

Any camera whose lens and shutter, or lens cells alone, are removable may be used for pinhole photography, or excellent work may be done with easily improvised apparatus costing practically nothing at all but the little work involved to make it.

Against the advantages enumerated above, there may be set two disadvantages:

The length of exposure required eliminates the photography of moving objects, but not necessarily the photography of scenes containing moving objects. For instance, street views may be made with all traffic eliminated. With a small pinhole the exposure is so lengthened that

the comparatively rapidly moving pedestrians and vehicles leave no impression. The same is true of interiors, where persons may walk in and out without any effect whatsoever.

Critical needle-sharp definition is not possible with a pinhole and this eliminates many non-pictorial subjects where such sharp definition is desirable or necessary.

III APPARATUS

THE PINHOLE AND ITS MAKING

Like the lens of an ordinary camera, the pinhole is the most important part of a pinhole camera. The requirements for an ideal pinhole are few but important; the aperture must be small, the usual range is from 1/45 of an inch to 1/75 of an inch in diameter; the edges of the aperture or pinhole must be extremely thin, the thinner the better, certainly not over 1/250 of an inch thick, less would be much better; the edges of the pinhole must be smooth and free from burrs and other projections.

The requirements are few and seem simple, but to reach the ideal is quite a task. Fortunately, examination will show that many a pinhole with which good photographs have been made was far from ideal; a microscope reveals much that would discourage the photographer had the revelation come before rather than after the exposure.

Some of the difficulties encountered if these requirements are not heeded are illustrated in Figure 1. Of course, the smaller the aperture, the finer the pencil of light admitted, and the smaller the circle of diffusion in the image, the better the definition. But the smaller the aperture, the thinner must be its edges in proportion, for, as is shown in the much magnified illustration, the more the pinhole approaches the shape of a tunnel rather than the ideal, an opening in a surface, the rays of light to the edges are interfered with and cut off, diminishing what may be called the covering power of the pinhole, which ideally and theoretically is infinite.

Again, if the aperture is tunnel shaped, Figure 1b, in addition to the direct pencil of light from "A" coming through the pinhole to form the image "Ai," other pencils of light from "B" and "C" may strike the sides of the tunnel-like aperture and be reflected to "Ai,' thus degrading the definition of the image "Ai" or blurring it altogether.

It is, therefore, highly essential that not only should the edges of the aperture be made as thin as possible, as near the ideal of no thickness as

possible, but if of metal that the aperture be dulled and blackened so as to eliminate any possible reflections.

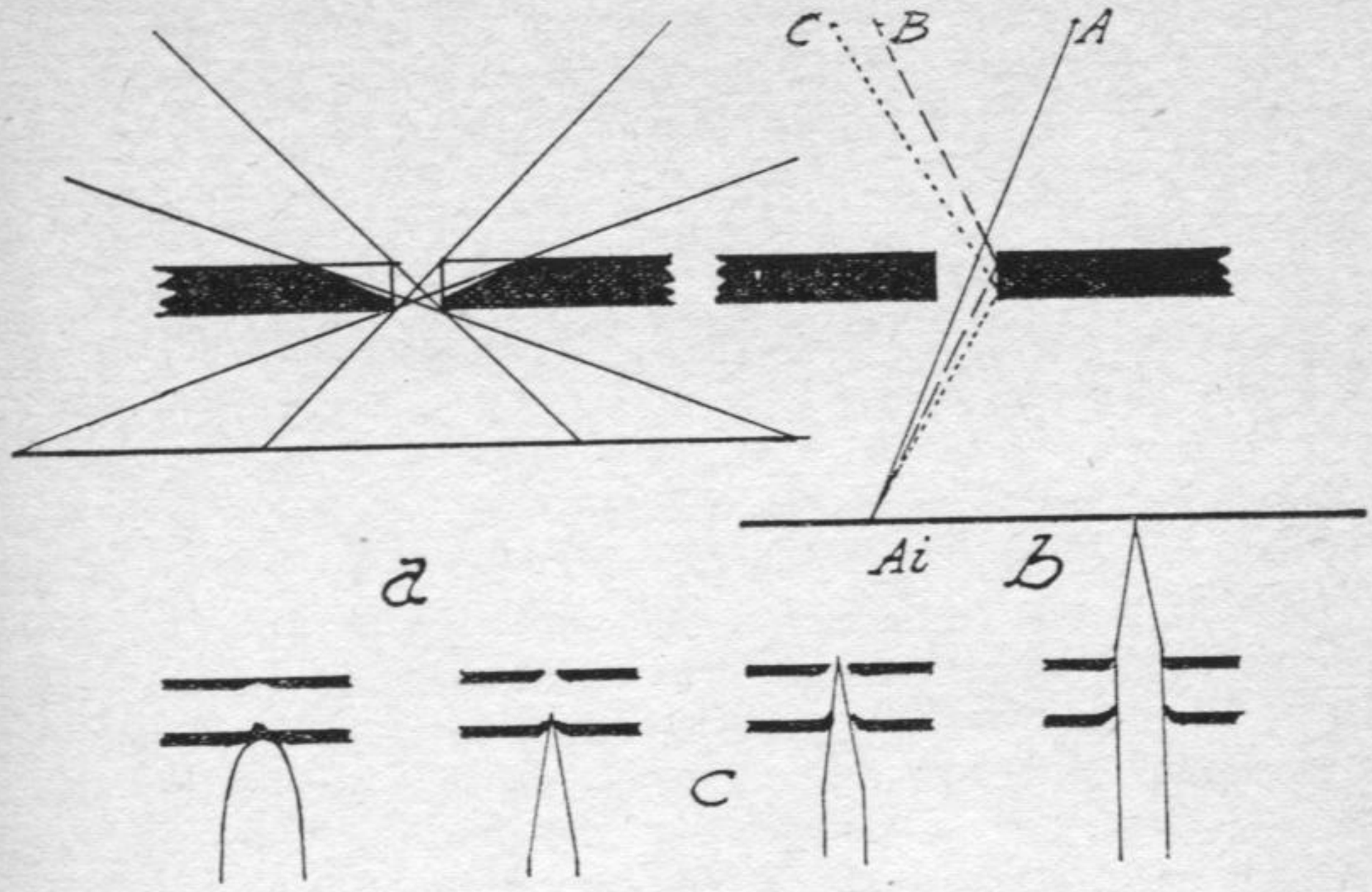

FIGURE I
Making the Pinhole

MATERIALS

The pinhole is made with a needle, as has been mentioned—and here is where the purists began their controversy over whether a needle-hole is ever a pinhole—and may be made in paper, thin metal, or thin material such as sheet fibre or bakelite.

The simplest material to use is, of course, paper: it not only punctures easily, but every photographer usually has an ample supply of just the right kind of extremely thin opaque black paper. I have gauged dozens of samples of the thin black paper packed between cut films and with sensitized paper and film-packs, and almost invariably the thickness is 1/300 of an inch, nearly ideal!

Before we can make the needed pinhole, we must have the needles of the right size. Since the beginnings of pinhole photography, three sizes have been most generally used, No. 10, about 1/55 of an inch in diameter, No. 11, about 1/65 of an inch, and No. 12, about 1/75 of an inch in diameter. We must know the size of the needle, for that is the simplest way of knowing the size of the pinhole, and the size of the pinhole divided into its distance from the film gives the F-number for that particular set-up and a guide to the exposure necessary, about which a great deal more will be said later. No. 10 needles can be bought

anywhere where notions are sold; 11's and 12's, however, are very difficult to obtain, and may be found only in the largest shops. For use, the needles should be forced, eye first, into little sticks or holders about the size of a lead pencil, or a fine pin-drill holder may be used as a handle. The most useful size is the No. 10, about 1/55 of an inch in diameter, so the difficulty of not being able to get the smaller sizes need not bother us much, at least in the beginning.

PINHOLES IN PAPER

Cut a strip of the thin black paper about an inch wide, and three or four inches long, draw diagonals on it in lead pencil to mark the center. Lay the paper on a piece of cardboard and just push the point of the needle through; you can now pick up the strip of black paper by the needle, very carefully push the needle through the paper and withdraw it. The needle hole looks clean on the face side, but has quite a ragged burr or rim on the back. Lay the paper *face down* on a piece of glass or other hard surface and holding the strip of paper in place, lay a sharp old-style razor, or a razor blade in a holder, flat on the paper and with a draw stroke move towards the needle hole until the cutting edge is just past the center. Do the same from the other end of the strip. You will thus *shave* off the burrs or rim of ragged paper. Pass the needle through again from the face side, and examine the needle hole through a pocket magnifier. If there is still considerable burr, the shaving process should be repeated. If the magnifier reveals fibres or ragged streamers across the needle hole, the needle should be run carefully through again, but with a little practice one puncture and a shave as described above will result in a serviceable enough aperture. Owing to the fibrous nature of the paper, however, the needle-hole in paper can never be made as clean-cut and smooth as one in metal. Notwithstanding this, some of the best pinhole photographs I have seen were made with the paper devices.

MOUNTING THE PINHOLE

For protection from injury, the black paper with the needle-hole should be mounted on a piece of heavier paper with about a ¼-inch hole in it opposite the needle-hole, of course, and the whole trimmed to about an inch square for mounting in a holder and shutter device to be described soon.

One of the best ways to do this mounting, whatever the material of the pinhole itself, is to take some strong black paper, the backing of roll film is excellent, cut a strip one inch by two, fold this strip once

to make a one-inch square, punch a quarter-inch hole in the center of the square through both thicknesses of the fold, spread paste or glue thinly, on the inside surface of the little folder, lay the pinhole over the punched hole, and rub down the other half of the folder over it. The whole mount may then be placed between the leaves of a book to dry.

PINHOLES IN METAL

Metal pinholes may be made of copper, brass, aluminum or even silver. They may be made in two ways, by using rather heavy, 24 gauge or so, metal or using very thin metal and mounting the finished pinhole on thin card or fibre as we did the paper one.

If the heavier metal is used, we must first cut a cup-shaped depression in it by starting to drill with a ¼-inch or 5/16-inch twist drill, stopping just before the drill begins to go through. We must be very careful not to puncture or tear the metal with the drill, but we do want to get the bottom of the depression as thin as possible. After the depression is made, the procedure is just the same whether we use the thin metal or the thick. See (c) Figure 1.

The metal is laid on a yielding surface, like several thicknesses of blotting paper or a piece of linoleum. With a blunt rounded point like that of a used lead pencil and gentle pressure, a dent is made in the bottom of the depression or in the center of the piece of thin metal. The metal is turned over and the bump raised by the pencil point is gently rubbed away, even with the surface, with a fine sharpening stone or smooth file. This results in a very thin spot in the center of the metal. The metal is now turned face-up again and laid on a block of wood or piece of cardboard. The thinnest center of the metal is now *just punctured* with the point of the selected size needle. This raises a burr on the back, which is rubbed away with the stone or file. The needle is pushed, not twirled or twisted, through a little farther and the burr rubbed down. This is all repeated until the needle passes through smoothly to its largest diameter. The needle hole should now be polished with the sharpened point of a toothpick, very gently because the edge is very thin if properly made. The needle-hole should be blackened with India ink or dull black lacquer, but preferably with heat and fumes from sulphur or burning match. The edge of the aperture must be blackened, above all else, to avoid stray reflections.

Examine the needle-hole with a magnifier and run the needle, used in making, through the aperture carefully to clean out any matter resulting from the blackening process.

For the rubbing down of the burr, various implements may be used; the principal thing is to rub lightly. Fine grained India, Washita, or Carborundum sharpening stones or hones may be used. An old style

slate pencil, which is all slate and not cased in wood, is excellent if used deftly. It should first be rubbed down on sand paper or emery paper until it has a blunt bevel on the end instead of a point. Very fine emery cloth is one of the best things to rub down the burr; it should be wrapped around a little block of wood about the size of a domino.

OTHER MATERIALS

The pinhole may also be made in thin celluloid or bakelite. In this material, a depression should first be made with a blunt drill, as is done in thicker metal, and the needle-hole then made as in metal by successive piercing with the needle and removing the burr, until the needle passes through. The burr can be removed, however, by shaving as suggested in making the paper pinhole, much more effectively than by rubbing.

Tinfoil for pinholes has some of the advantages of paper and lacks some of its disadvantages. Tinfoil may be had as thin as the paper recommended, it is easily pierced and its structure not being fibrous like paper, the resulting aperture is cleaner. The burr may be removed by shaving as recommended for paper. The disadvantages of tinfoil are that if thin enough, it is extremely fragile, and it is also quite difficult to blacken.

Considering the different kinds of material, the best is most certainly the heavier sheet metal thinned down by a drilled depression. Well made, this style of pinhole is strong and substantial, and can be made with edges extremely thin. If the depression is hammered a bit with a small ball-pane hammer after drilling, the center which is to be pierced with the needle can be compacted, making it both thinner and smoother. Heating and cooling quickly in water will anneal the brass or copper and render it soft and smooth to work.

The next best material is extremely thin brass or copper. Pinholes made in thin metal and carefully mounted can be almost ideal with the minimum of labor.

Paper is the simplest material to use. For quick improvision and experimental purposes it is about the best.

SHUTTERS AND MOUNTING

The serious worker will want to use at least three pinholes, those made with a No. 10, a No. 11, and a No. 12 needle. Also, if the camera used has a ground glass focusing screen, an opening about ⅛ inch or a little less in diameter is useful for "focusing," really composing and placing the image. Such an opening gives, under reason-

ably good conditions of light, a visible though much blurred image. It is quite definite enough, however, for the purpose of determining the camera extension or relative size of image and its composition and location on the picture plane. The various pinholes may be used singly with individual shutters or grouped to be used with a single shutter device. The shutter needs to be only a simple affair, a slide or a swinging flap is all that is needed.

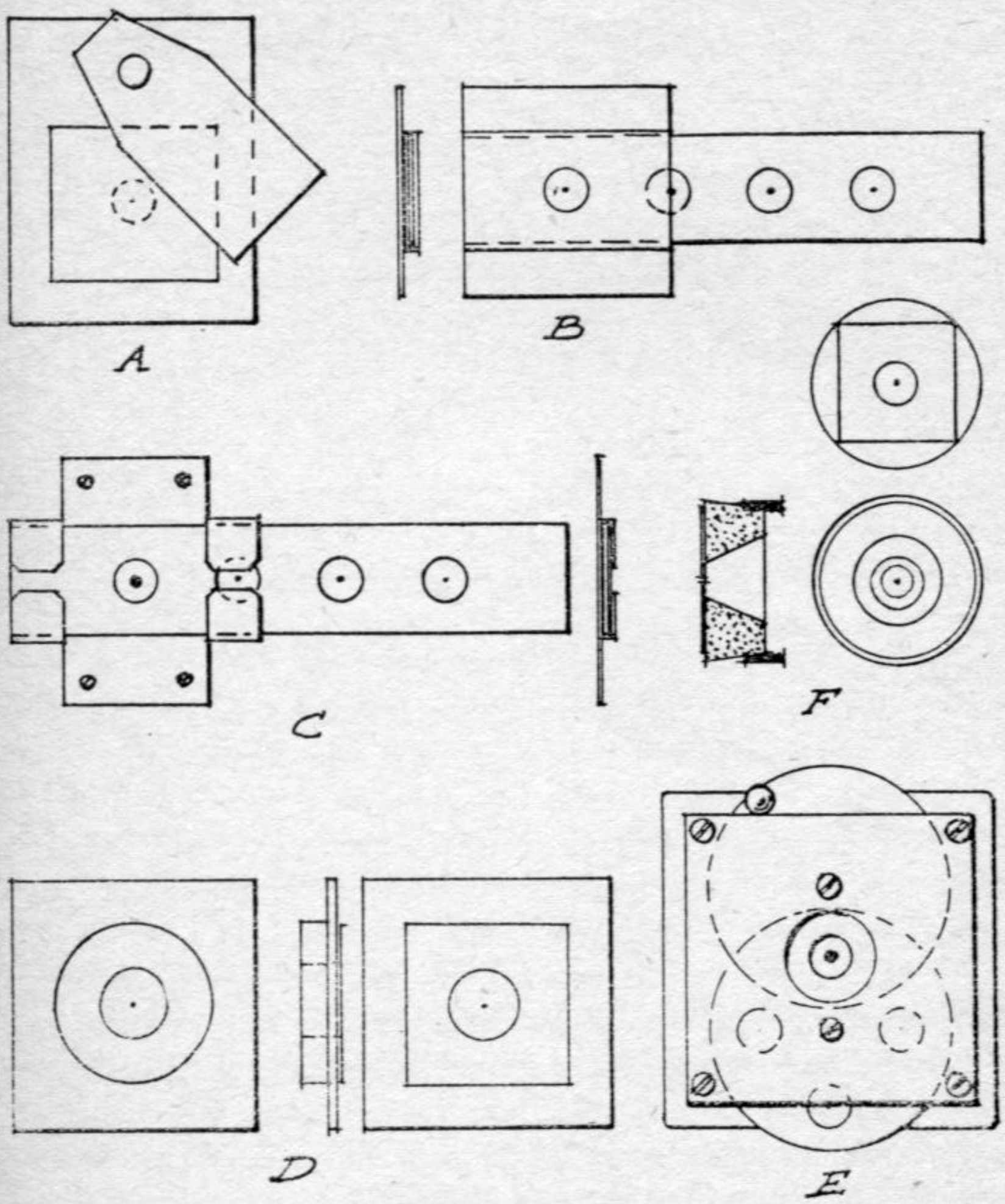

FIGURE 2
Pinhole Mounts and Shutters

Figure 2 shows a variety of shutter devices for pinholes. The simplest of all is "A" for a single pinhole. The pinhole, prepared as already described, is mounted on a piece of cardboard, fibre or thin plywood through which a ¼-inch hole has been bored or punched, over this as shown is pivoted a flap of cardboard, metal, or thin wood. The pivot may be an ordinary pronged paper fastener, or a screw going through

mount to front board of camera. The mount may be fastened to front board of camera with a number of small brads, with small screws, or it may be glued on. If used on an old lens board, which is already cut out for a lens flange, the mount should be made large enough to cover completely the old flange opening. The back of hole through mount had better be reamed or beveled, funnel fashion.

A sliding shutter carrying four pinholes and easily made of paper and cardboard is shown at "B," Figure 2. A strip of thin cardboard or heavy paper, preferably black—the backing paper of roll film will do nicely——1¼ inches wide and 3⅛ inches long, is scored and folded lengthwise, and after folding, four quarter-inch holes are punched through the two thicknesses as shown. The several pinholes are then pasted or glued between the flaps of this folded strip and centered at the holes previously punched, as elsewhere described, for mounting pinholes. This strip should be dried under a weight or between the leaves of a book. Instead of using a folded strip of thin cardboard, two ⅝-inch strips of heavier cardboard or fibre may be used.

When this aperture strip is completed and dry, a piece of heavy paper 1¼ inches by 2 inches is wrapped snugly around the strip and the ends lapped and pasted to form a tube or slide. If a strip of fairly thin paper the width of the cardboard strip is included with it before forming the tube or slide over it, there will then be enough play in the slide for it to work easily.

The slide is glued to the center of a piece of heavy cardboard or ply wood 1¼ inches square and in the exact center through both walls of the slide and the cardboard or plywood mount is punched a quarter-inch hole. The film carrying strip is now inserted in the slide and any pinhole aperture on the strip may be brought into line for exposure. The spaces between apertures act as shutters.

The shutter mount should be lined on back with felt or velvet and fastened to camera or front board with small screws as shown.

At "C" in Figure 2 is shown a shutter quite similar to the one shown at "B," but the mount and slide are formed from one piece of thin sheet metal 1½ inches square. The making is obvious. Cut down four slits ⅜ths of an inch long and 5/16ths of an inch from each corner. Lay the aperture strip over this piece of metal and bend the corners over it to form the slide, as shown. The back should be lined with felt or velvet as before.

ADAPTER FOR LENS FLANGE

Where the same front board is to be used for both lens and pinhole work, the lens flange remaining on the front, an adapter to carry the

pinhole device is easily made. See "D," Figure 2. Cut out a ring of plywood, about ¼ inch thick and in size to just fit the thread in flange. Glue this ring to a square of plywood or "Presdwood," to which may be fastened any of the shutters described, and the whole easily turned into the original lens flange after temporary removal of lens and shutter.

ADAPTER FOR SHUTTER

It is often difficult or inexpedient to remove the shutter from the camera used for pinhole work. This is especially true of compact folding cameras with metal fronts. The lens cells only need be removed. A large cork such as comes with bottles of dry chemicals may be fitted into the shutter in place of front lens cell. A ⅜-inch hole should be bored in the center of the cork, and flared out funnel fashion on the back and the whole thing painted a dull black. The pinhole is glued on the front of the cork, a cork adapter being made for each size pinhole used. The exposures are made with the regular shutter. If the camera used has a ground glass, location and composition of image may be accomplished before inserting pinhole adapter, with the regular iris diaphragm stopped down to ⅛ inch or less. The diaphragm should be open to at least ¼ inch when pinhole is used. See "F," Figure 2.

In combination with a between-the-lens shutter as described above, another scheme may also be used. The pinholes may be mounted on thick disks of metal or cardboard the size of lens cell and placed flat against the partly open iris diaphragm. The regular shutter is used for exposures as before. Great care must be taken to see that the disks are not so thick as to obstruct the working of the shutter blades and that the disks stand flat against the diaphragm. Care must also be taken in placing and removing the pinhole disks so as not to injure the diaphragm or shutter blades.

At "E," Figure 2, is shown a commercial pinhole device and shutter of excellent form. It is almost ideal. This accessory was originally designed by Jas. H. McCorkle and marketed by the Century Camera Co. about twenty-five years ago and is now quite difficult to obtain. It consists of two rotating disks in a case, arranged so that their outer edges lap about ⅜ths of an inch. Along the edge of the lower disk are placed four apertures, three pinholes No. 10, No. 11, and No. 12, and one larger aperture for "focusing." This lower disk has a milled edge, which facilitates its rotation. The upper disk has one large opening about ¼ inch in diameter and is rotated a short distance to the left or right by means of a little knob at the top. Swung to the left, the large opening in the upper disk comes opposite the pinhole and the shutter is open. A swing to the right closes the shutter. This is one of

the most convenient pinhole accessories ever devised. It does not seem to be purchaseable any more, but can be made without much trouble by anyone skilled in model making and fine metal work.

IV THE CAMERA

The camera for pinhole photography need be no more than a light-tight box painted a dull black on the inside and arranged to hold a film or plate at one end and fitted with a pinhole at the other. This may be elaborated as much as desired, and unless one is ingenious enough to arrange the back to receive a plate or film holder, the simple box device must be loaded in the dark room for each exposure, something of a nuisance for outside work at least. Later we shall describe the making of a box camera both with and without the provision for a plateholder.

To those who wish to experiment with pinhole photography with the least preparation and without much further ado, the parts for a 3¼″ x 4¼″ box camera, including the paper for the pinhole and even the needle for making it, with complete directions and simple exposure data, all easily put together by even a youngster, is sent out by the Eastman Kodak Co. for a nominal sum.

VIEW CAMERA FOR PINHOLE WORK

The best camera for pinhole work is a view camera from 5″ x 7″ to 8″ x 10″ in size with rising front and drop bed or other device for wide angle work. To the frontboard of such a camera any of the pinhole devices and shutters, the making of which have been described, can be readily fitted, and any type of pinhole work can be done effectively.

At the moment, it is very easy to pick up the now rather despised 5″ x 7″ folding camera second hand, without lens or shutter, for very little money. Such a camera can be easily turned into an excellent pinhole outfit.

Any camera, box or folding, whose lens and shutter or lens cells only can be temporarily removed, may be fitted with pinhole device and used for pinhole work.

A BOX CAMERA

The simplest box camera for pinhole work is the one supplied knock-down by the Eastman Kodak Co. We present a sketch of this camera in Figure 3. It is furnished in one size only, for 3¼″ x 4¼″ cut film,

and excellent work may be done with it. Similar cameras to take 4″ x 5″ or 5″ x 7″ film and with different distances from pinhole to film, may easily be made from heavy cardboard by anyone at all handy and having

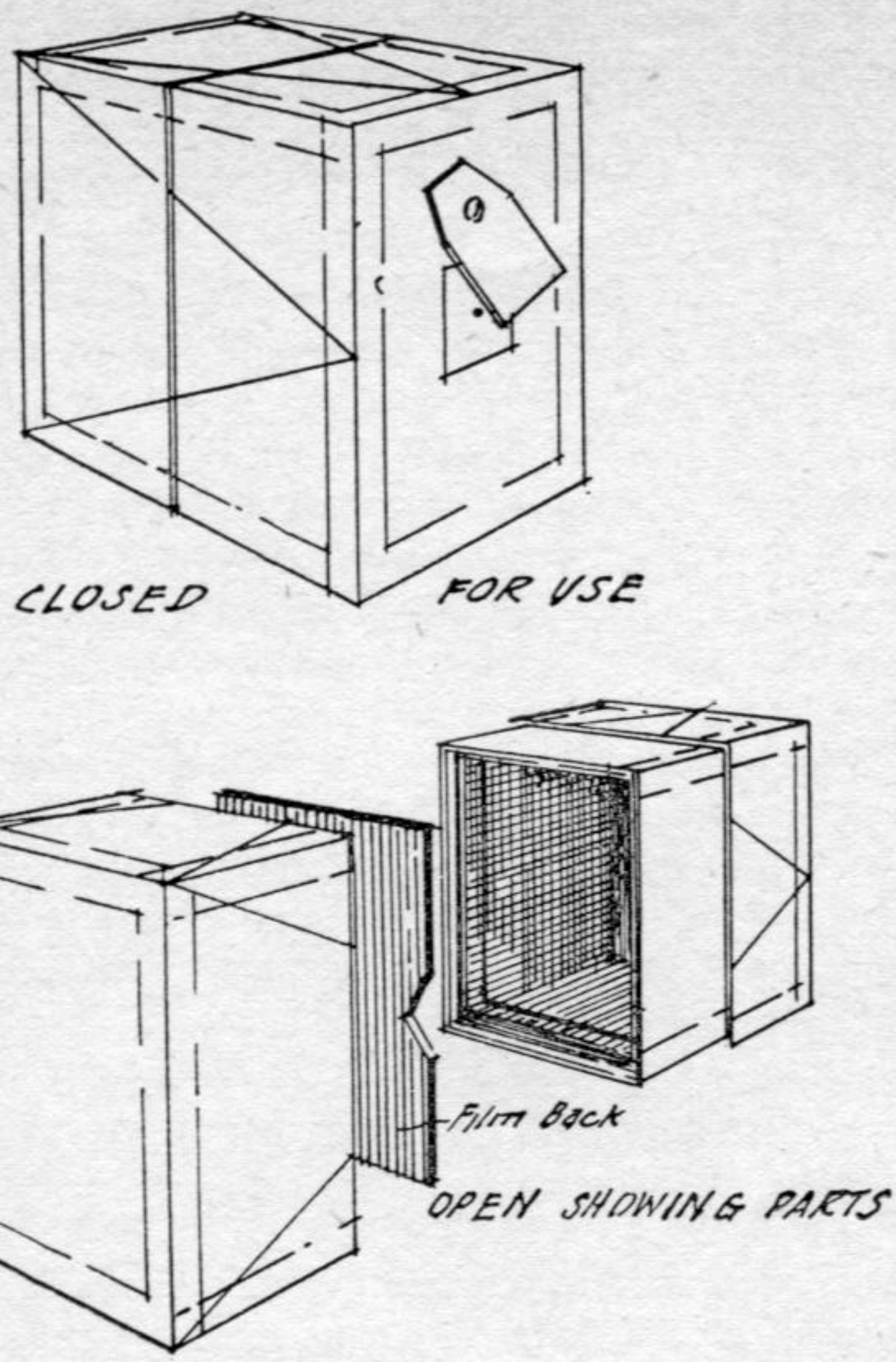

FIGURE 3
Eastman Pinhole Camera

the small camera for a model. Of course, such a camera is non-flexible in itself: it takes one size film, the pinhole is at a fixed, non-adjustable distance from the film and it must be loaded in the dark-room for each exposure. Nevertheless, I advise anyone interested in pinhole work, and who has never done any of it, to send for one of these outfits and make a few exposures with it. It will teach him much, and will probably make an enthusiast of him.

A more elaborate box camera is shown in Figure 4. This is preferably made of plywood or "Presdwood," but any thin wood will do, and often a box may be had already made which may be remodeled for use as a pinhole camera.

The features of this camera are that the film may be moved to various positions at different distances from the pinhole, and that there are two pinholes provided, one in the center of front and another to one side, which when camera is turned on side gives the advantage of an extreme rising front to enable the photographing of tall buildings or spires at close quarters.

A curved holder for panoramic work may also be provided.

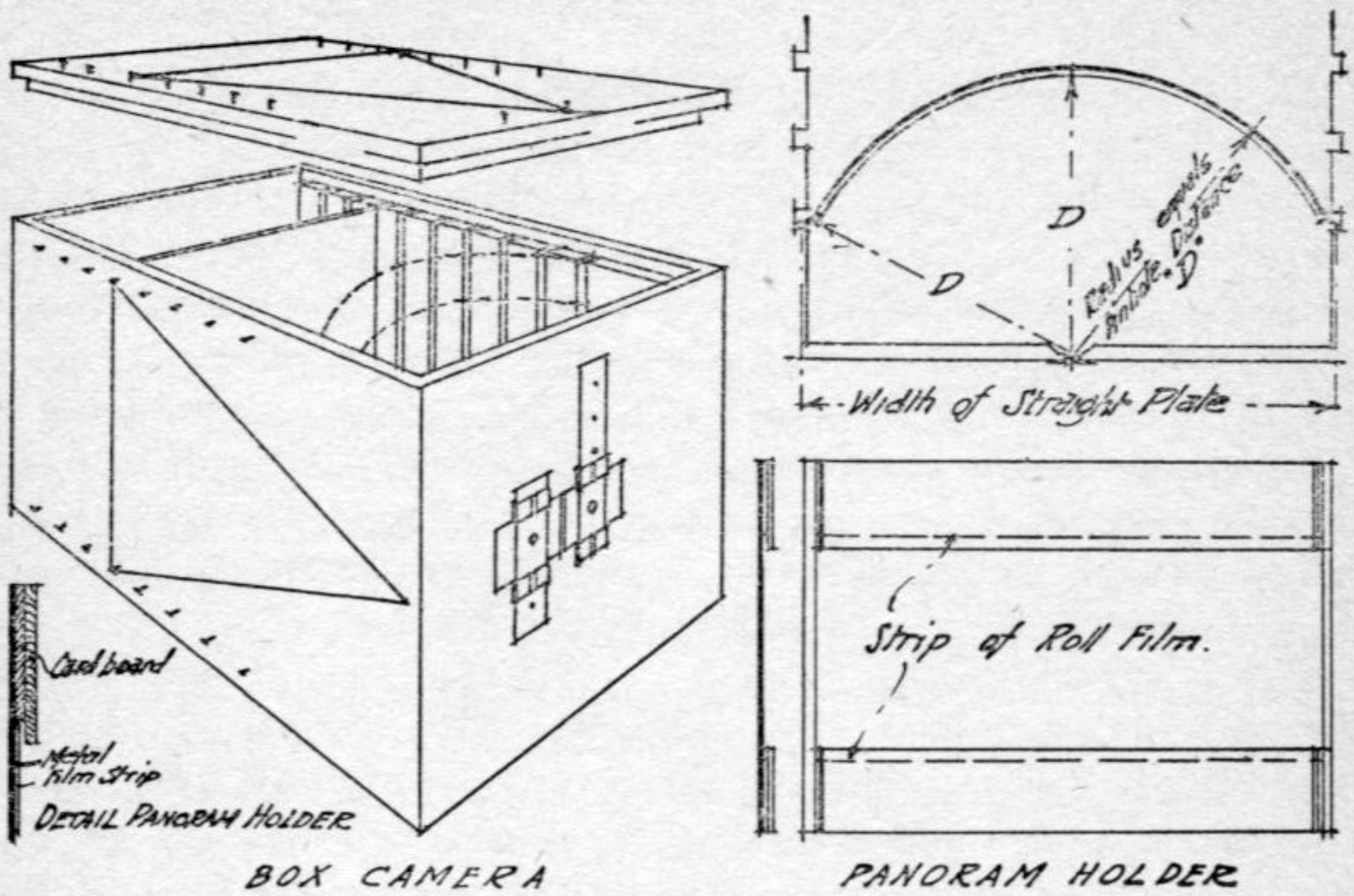

FIGURE 4
Universal Box Pinhole Camera

The essential and first requirement of this camera is, of course, that the box be absolutely light tight when closed. The cover should be double rabbetted and held in place with one or, better yet, two large rubber bands, or with hooks and screw eyes.

The film holders may be the ordinary metal sheaths sold for use in plate holders or they may be made of heavy cardboard with mounting corners to hold the film.

The sides of the camera should be grooved to hold the film carriers in various positions. If no tools are available to cut these grooves, an excellent substitute may be improvised by gluing strips of corrugated paper board to the sides. As the grooves need not be closer than about 1 inch apart, another expedient is to use thin strips of wood (cigar box, plywood, or "Presdwood") about 7/8 inch wide glued to sides about 1/8 inch apart, to form the grooves.

The making of the pinholes and shutters for use with this or any other camera has been described, but two 3/8-inch holes should be bored

in the front, and these holes should be reamed or bevelled on the inside so as to leave a thin edge only at the face. The pinholes and shutters are fixed over these openings.

The interior of the camera should be painted a dull black and if any trouble is encountered in making the joints light tight, they may be covered with strips of opaque gummed paper or cloth, or plain material glued on. The paper and cloth, gummed, passe-partout binding sold in art stores and by stationers is excellent for this purpose.

As the camera is to be improvised rather than made from special material bought for the purpose, no precise dimensions may be given. For 5″ x 7″ films, however, the width should be 7 1/16 inch between grooves, the depth a little more than 5 inches, say 5⅛ inches, and the total length about 12 inches. Grooves should be provided to enable placing the film carrier, as near as 2 inches from the pinhole.

With cardboard film carriers, the mounting corners may be placed to enable the use of any size film smaller than 5″ x 7″. If cardboard carriers are used, the camera may be made a little larger, say 5½″ x 7½″, or even 6″ x 8″, the boards cut to fit after the grooves are in place, and the mounting corners placed to take the size film used.

The curved film carrier for panoramic work, as shown in Figure 4, is inserted in grooves the same as the flat carriers. Panoramic work should be done with the film comparatively near the pinhole to obtain a reasonably wide angle of view. The panoramic holder can be used in only one position in the camera and this groove should be marked in some way. The radius of curvature of the film carrier must equal the distance from the pinhole. How to lay this out accurately is shown in Figure 4.

The curved panoramic film holder is best made of sheet metal heavy enough to hold its shape, No. 30 gauge aluminum is good. After cutting and bending to proper shape, the face of the metal should be covered with thin black paper. If the metal is lightly rubbed with fine sand or emery paper, and the black paper moistened before pasting or gluing, it will adhere firmly. After the paper is dry, strips of cardboard should be glued at top and bottom edges to form a rabbet for film as shown in Figure 4. The strips should be spaced to take either 2¼-inch or 3¼-inch roll film; strips of this cut from the roll are the best and most economical to use for panoramic work, although strips cut from large cut films may, of course, also be used.

SUGGESTION FOR FINDER

As the camera has no focusing screen, we must provide some means of gauging the image. This is easily done if on the cover and side of

the camera we place small brads as near the front edge as possible and opposite the pinholes, and as near the other edges as possible over the ends of the principal film positions. By stretching rubber bands over the front brads and over the pairs at the film plane, we form triangles along the sides of which we may sight accurately the limits of the field taken in as shown in Figure 4. Of course, lines may be drawn if preferred.

FILM MAGAZINE

The Rev. J. B. Thomson, who describes a camera similar to this one, suggests the arrangement of two compartments in the back of such a camera by using two opaque screens or slides in the film grooves, one compartment being for unexposed films and the other for storing the films after exposure. The films are manipulated and placed in position for exposure and shifted for storage by means of a changing bag. This old-time device for changing plates in the field without a dark-room is now a rarity in this country and its use, a still greater rarity. Mr. Thomson's suggestion is nevertheless an entirely feasible one.

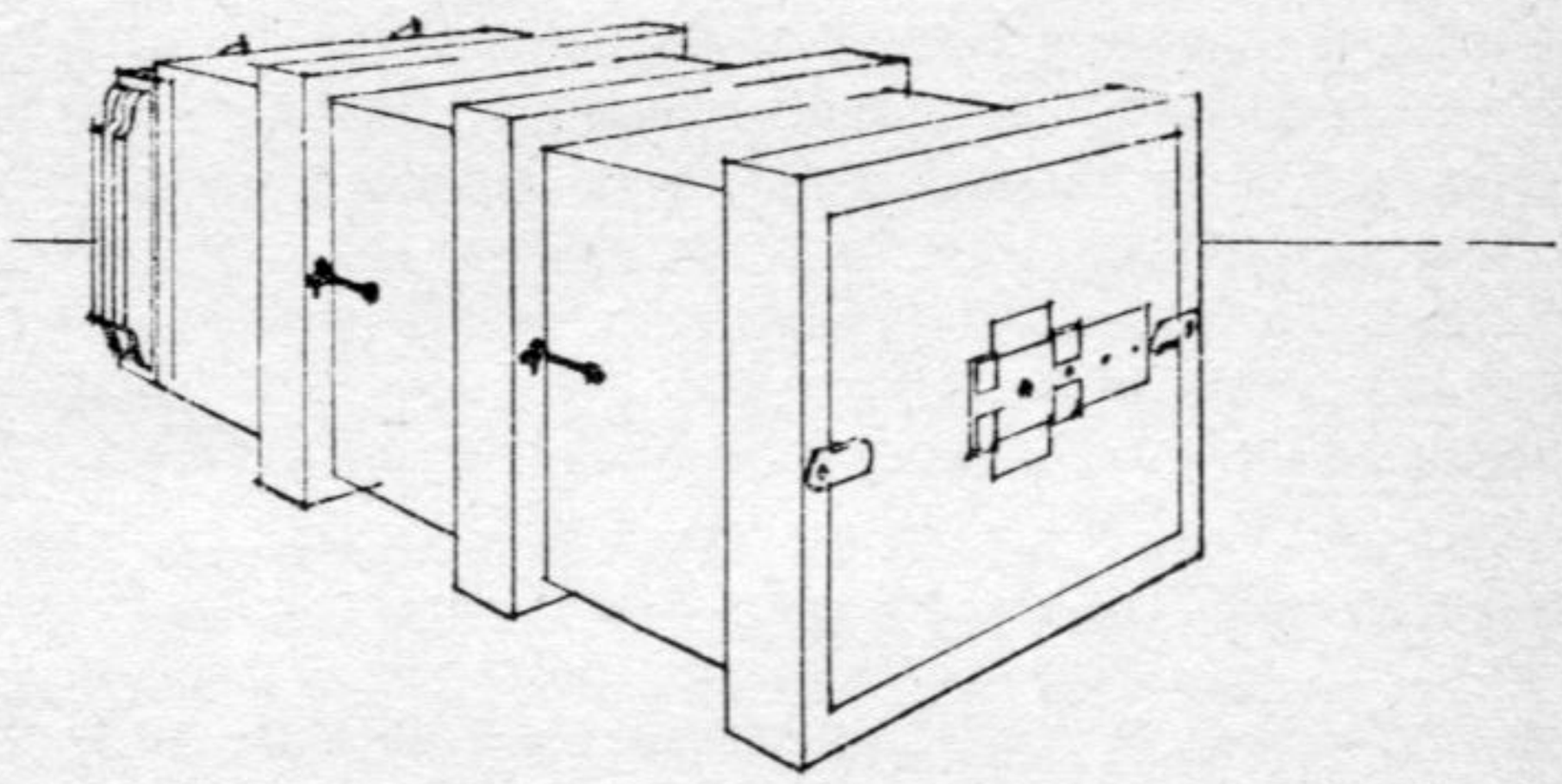

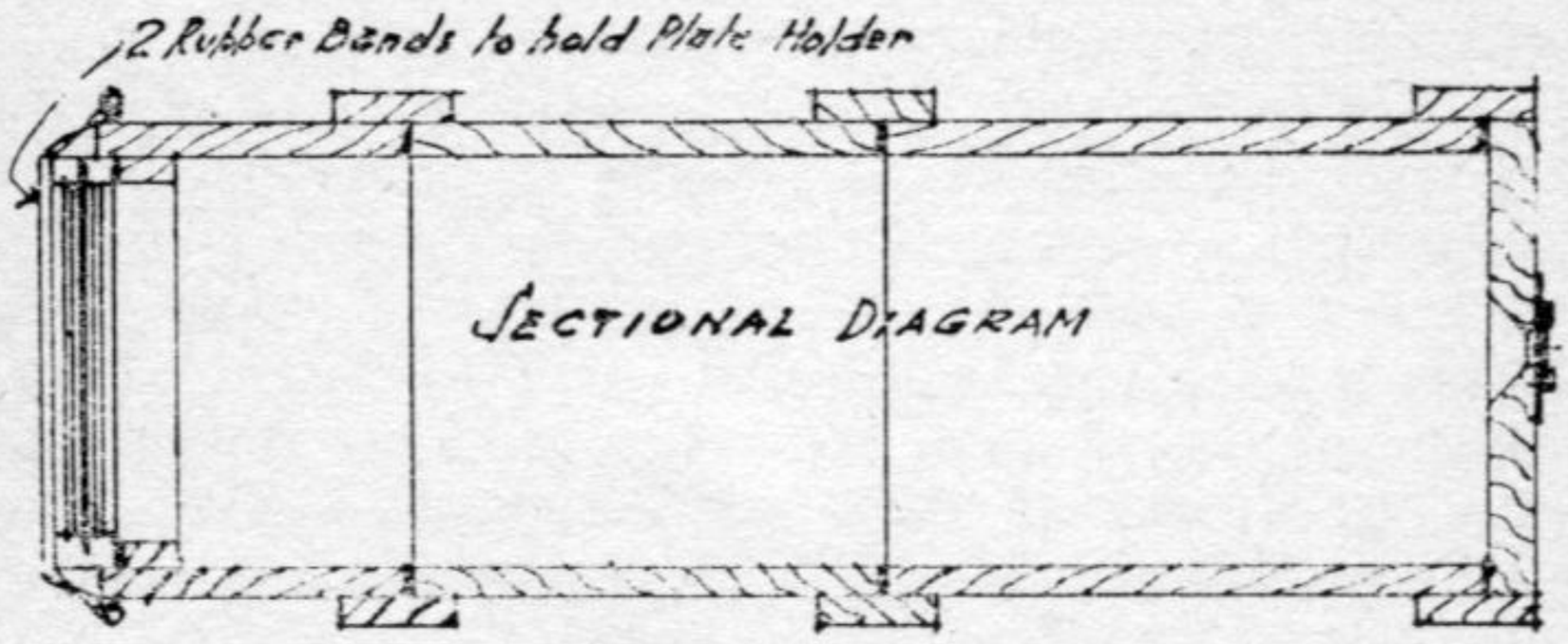

FIGURE 5
Sectional Box Camera With Holder

SECTIONAL CAMERA WITH PLATEHOLDER

Figure 5 shows a box camera in three detachable sections with detachable front board, and back arranged to receive plateholder or film-pack adapter. The back section used alone gives an extreme wide angle, two sections used together give a normal angle and all three sections a narrow angle and a large scale or telephoto image.

The sections may be made in different widths so as to provide several combinations for more varied pinhole-to-film distance.

Roll film or film-pack cameras of the larger sizes with cheap lenses or no lenses at all can be picked up these days for a song and they can be easily turned into pinhole cameras with excellent possibilities. If they are fitted with wire frame finders, these are ideal for pinhole work, as they are self-adjustable for all variations in extension.

V PINHOLE POSSIBILITIES

Having acquired or made one or more pinholes and shutters and having fitted them to a camera or perhaps made a special camera, we may now go picture making with a pinhole. Before we get too busy, however, and to get the most from the advantages provided by the pinhole and to suffer the least from its disadvantages, we should review the facts and principles of pinhole photography in order to have a clear understanding of its possibilities and limitations, and what we may, therefore, be able to accomplish by the use of a pinhole instead of a lens.

EXPOSURE MYSTERY

There has been a mysterious haze of guesswork in regard to exposure required with a pinhole and a great deal of generalizing and finally leaving the subject of exposure with the statement that, after all, the matter of pinhole exposure is a matter of experiment. For all that, the whole process of photography is a matter of experiment, but we need not waste effort in guessing at things which have been pretty definitely settled by experiment and we need not flounder around in the dark when there is ample light available. In our final chapter, we shall describe the procedure and furnish data which will make correct exposure with a pinhole as easy and simple as it has come to be with a lens. The great improvement and increase in sensitivity, both quantitatively and qualitatively, of photographic emulsions helps a great deal.

In photography as in any other creative art expression, and photogra-

phy may be made a creative art expression if we but will and try hard enough, the best results are those which come by the fullest and truest utilization of the unique qualities and possibilities of the process or medium we may be using.

Recording the instantaneous arrest of motion is not for pinhole photography; the elimination of disturbing motion or action by long exposure is. The microscopically sharp definition of the finely corrected lens is decidedly out of the realm of the pinhole, but the soft, impressionistic image full of vibration and atmosphere is of its very warp and woof.

The qualiy of image all its own, with its simplicity, its possibilities for panoramic and wide angle work far beyond the possibilites with a lens, should make pinhole photography an intriguing field for the serious amateur who wants to make real pictures without faking, or muddling or dodging which go under the polite designation of "control." Many a print made from a pinhole negative has carried off the honors at exhibitions without the judges knowing or questioning how it was made. One rarely sees more attractive prints than those exhibited and published by Dr. H. D'Arcy Power, for instance, and there is considerable satisfaction in realizing that they are honest photographs, that they have neither been soused in oil, rubbed with sandpaper nor high-lighted with an ink eraser, neither have they benefited by the magic of an elaborate scentifically constructed lens. A tiny aperture which sees much but not too sharply has given them that alluring quality we get when our eyesight has mellowed a bit and we have perforce learned to see wisely but not too much.

APERTURE AND EXTENSION

In reviewing the many articles on pinhole photography published in the last twenty-five years, one is impressed with the number of discussions as to the relation between the size of the pinhole and its distance from the picture plane, and with the haziness of these discussions. There seems to be a general agreement that there is an ideal pinhole-to-film distance for a given size pinhole, although the optical reason for this is most obscure; in the findings as to what is this proper relation between size of pinhole and its working distance from the picture plane, there is the greatest disparity. The conclusions of expert workers seem to vary as much as fifty per cent. Certainly, within reasonable limits we need worry but little, if at all, about this proper relationship between size of aperture and distance from film. A few things we must remember, however. With long extensions, the strength of light varying as the square of its distance from its source, the actinic power of the image is feeble and the necessary exposure extremely long.

Again, when the pinhole is near the picture plane, as in wide angle work, we encounter another disturbing condition. The nearer the pinhole to the film, the larger the pinhole and necessarily the more diffused the image must be. As we have already pointed out, the pinhole apertures are bound to have some thickness, usually about 1/300 of an inch, the smaller the pinhole the greater, relatively, is this thickness, and the more tunnel-like the aperture with the consequent tendency not only to cut off the rays of light, but to reflect them from the sides of the aperture with disturbing results.

EXTREME WIDE ANGLE

It is quite possible with a No. 10 needle-hole, properly made with thin edges, to embrace an angle of 125 to 130 degrees. When working at this extreme angle, however, two things happen as shown in Figure 6. First, the rays of light reaching the edges of the plate are appreciably longer than those reaching the center. At the plate the image points formed by these rays reaching the edges will be considerably less illuminated than those at the center. In other words, the negative will be quite unequally lighted and of unequal density. This can usually be corrected by dodging and manipulation in the printing.

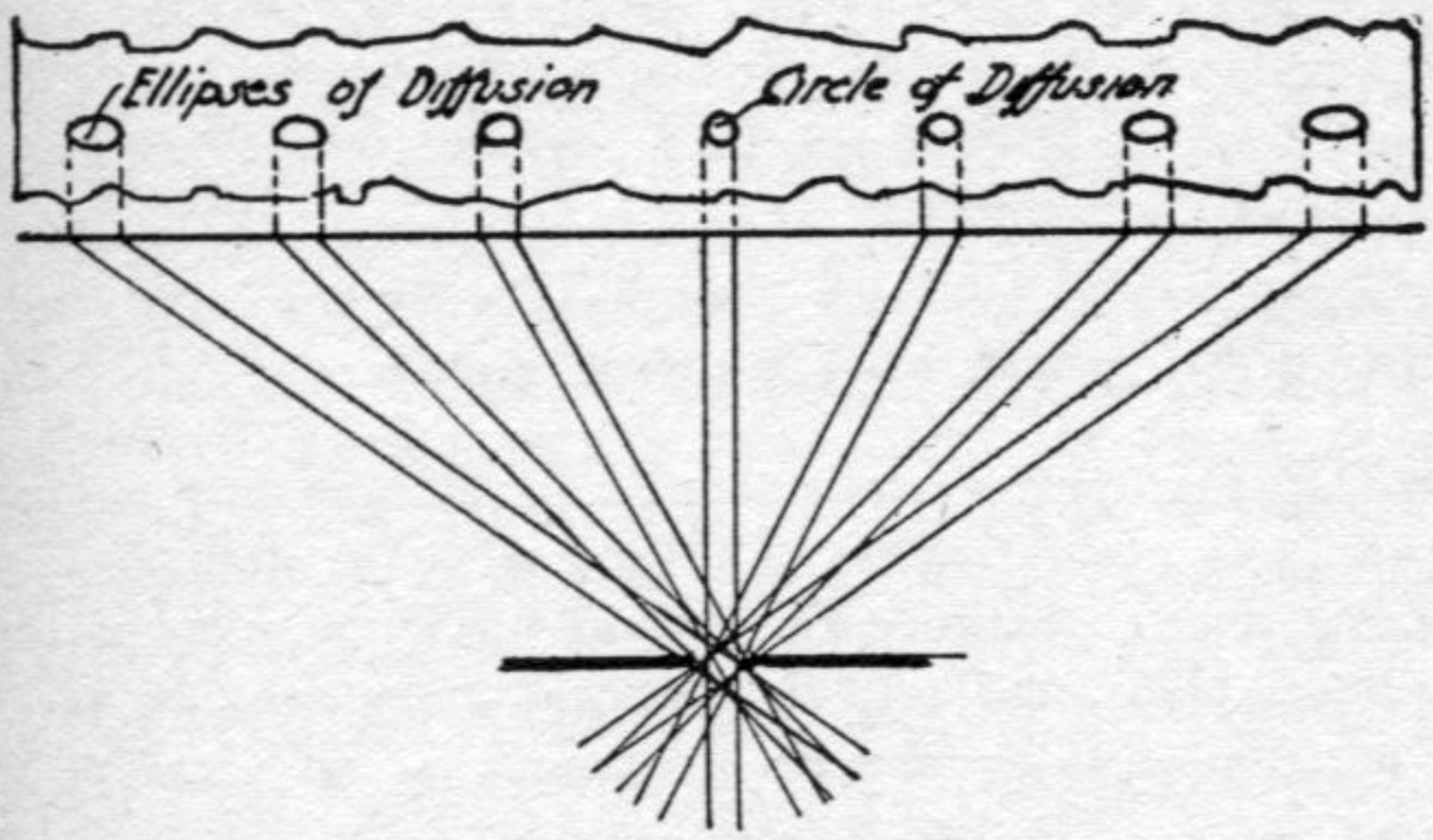

FIGURE 6
Extreme Wide Angle Defects

The second phenomenon of extreme wide angle work with a pinhole is the phenomenon of unequal diffusion. As has already been pointed out, the image is composed of small circles of diffusion approximately the diameter of the pencil of light admitted by the pinhole, when the pencil of light meets the film at a highly acute angle, as it does at and near the edges in extreme wide angle images, the circle of diffusion

becomes an *ellipse* of diffusion with a somewhat greater area. This is not very apparent except with a comparatively large pinhole and comparatively short pinhole-to-film distance.

There is still another effect in extreme wide-angle work, whether with pinhole or lens, the difference being that it can be overcome when a pinhole is used and cannot be easily corrected with a lens. Of course, the image formed through a pinhole is not distorted, mathematically at least; the image is an absolutely correct projection in correct perspective no matter how wide the angle of view embraced. The trouble is that the extreme wide angle image does not conform to human eye experience and so seems distorted.

PINHOLE PANORAMAS

The normal human angle of view is about 15 to 17 degrees when the eyes are held in fixed position. By slight unconscious shifting or rotating of the eyes, we usually take in an angle of view of 40 or 45 degrees. With a greater and conscious shifting of the eye, we may take in as wide an angle of view as we wish—a complete circle of 360 degrees if we turn completely around. But those images we perceive by a shifting of our position are *panoramic* images; they correspond to images projected on a curved surface rather than on a plane and so an image embracing more than an angle of 40 degrees or so projected on a plane surface seems unnatural and distorted. With a pinhole camera, it is easy to provide for curving the film, and the pinhole at the center of curvature will cover any reasonable angle up to about 130 degrees with uniform definition. The pinhole camera is pre-eminently fitted for panoramic work. With a lens camera, the lens being incapable of covering more than a relatively small angle, panoramic photography is achieved only by curving the sensitive film and rotating the lens for exposure as in the old Panoram Kodaks; by rotating the regular camera and exposing successive strips of film which are joined and combined in the print; or by rotating the camera and simultaneously moving the film across a comparatively narrow opening at the focal plane, as in the "Cirkut" camera. If the comparatively long exposures and soft definition of pinhole photography are no obstacles, its great simplicity and advantages for panoramic photography are obvious.

PINHOLE PORTRAITURE

Pinhole portraiture has never appealed to the writer, although it has its advocates. The long exposures necessary are an obstacle to modern portrait technique. Artificial lighting is difficult, although the use of supersensitive film and flood-lighting has possibilities. The greatest

drawback to good pinhole portraiture is the impossibility of differential focusing. In the hands of the experienced portrait photographer, the ability to emphasize some features and subdue other features, to subdue the whole background with a wide open lens, to catch unconscious expressions, and beautiful natural poses with an unbelievable quickness, are powerful implements for good. In such work, the slowness of the pinhole and its infinite capacity for depth of focus and uniform definition are maddening.

PINHOLE ENLARGEMENTS

An interesting combination of lens and pinhole quality may be attained by making pinhole projection prints from negatives made with a lens. Of course, exposures are long. But the pinhole enlarger is the simplest of all automatically focused enlargers; it is in focus at all settings. If the distance from negative to pinhole is equal to the distance from pinhole to print, the projected print is the same size as the negative. If the distance from pinhole to print is twice the distance from pinhole to negative, then the projected print is twice the size of the negative, and so for all settings, the size of the projected print is to the size of the negative as the distance from the pinhole to print is to the distance from pinhole to negative. The total distance from negative to print is immaterial except as it affects the strength of light reaching the image.

MODELS AND STILL LIFE

In photographing models and still-life compositions, the problem is often difficult because the camera must be brought near to the subject, and the depth of field is very great in comparison to the camera distance. To pinhole photography with infinite depth of "focus," great depth of field offers no difficulty whatever. It offers acceptable definition at any distance, any reasonable angle of view, and any scale of image size. It is the tool pre-eminent for model and still-life photography if needle-like sharpness can be forgotten.

COPYING WITH A PINHOLE

Usually copying calls for all the precision of a good lens, but there are times when the slight diffusing power of the pinhole may be found useful. A pinhole will eliminate rough paper texture and the screen of half-tone engraving. A copy of a 50-line screen newspaper half-tone made with a No. 10 pinhole showed no trace of the screen and was pleasingly soft. For finer engravings, smaller pinholes may be used.

INSTANTANEOUS PHOTOGRAPHY

Pinhole photographs can be made with an exposure of from 1/5 down to 1/10 of a second or less, if we use fast film with a No. 10 pinhole on a very bright subject, distant landscape or bright beach scenes. This is not exactly what we call instantaneous, but films are getting faster and most likely we shall soon be able to cut these exposures to half or even less. But why worry about instantaneous pinhole photography. Instantaneous work can be done so much better with a lens.

VI EXPOSURE

THE PROBLEM

The problem of exposure with a pinhole is much the same, essentially, as the problem of exposure with the lens. The required time of exposure for photographic purposes depends on several factors: (a) The strength of the light, varying with the time of year and time of day, the clearness of the atmosphere and the condition of the sky as to quantity and character of clouds, and what medium it passes through before it reaches the film; (b) the character of subject as to local color and position determining what color of light and how much light is reflected by it; (c) the sensitivity or speed of the film or plate used; (d) the diameter of the opening used to form the image, and (D) the distance of this opening or aperture from the sensitized surface of plate or film, or what is called in Perspective, the picture plane.

These five factors taken together determine the proper exposure no matter what we wish to photograph and with whatever kind of apparatus we wish to photograph it and under whatever conditions we wish to do so. Our ordinary experience and knowledge regarding the first three factors, (a) the strength of light, (b) the character of subject, and (c) the sensitivity of plate or film, as related to lens photography, will serve us just as well in pinhole photography. Our experience and knowledge gained through lens photography as to factors (d), diameter of aperture and (D) its distance from the picture plane must, however, be used with considerable thought and calculation, for although they affect the variation in exposure in exactly the same way whether a lens or a pinhole is used, the range of variation within themselves is longer and as statisticians would say in "a different bracket" and the variables themselves are reversed, whereas in lens photography for a given lens, "d," the diameter of working aperture is a variable and "D," its distance from the picture plane, is practically a constant, with a given pin-

hole, "d," the diameter of the working aperture, is a constant, while "D," its distance from the picture plane, is a variable and may be almost anything.

In a lens, the distance "D" from lens to picture plane is usually taken as its focal length, its distance from the picture plane when objects at a great distance are in focus, and that distance divided by the diameter of the aperture used is the f/number of the lens. With lenses of a given angle, the longer the focus the larger the lens. With the normal lens angle of about 40 degrees, it will take a focal length of about eight inches to cover a five by seven plate, and a focal length of sixteen inches to cover an eleven by fourteen plate. At f/8, the diaphragm spacing or working aperture of the 8-inch lens will be the focal length divided by 8, or one inch, and of the 16-inch lens, 16 inches divided by 8, or 2 inches. Of course, the 2-inch opening will pass four times as much light as the 1-inch opening, the areas of the openings varying as the square of their diameters, but let us see what happens.

The strength of light varies *inversely* as the square of the distance from its source. With the sixteen-inch lens the light travels twice as far from the lens to picture plane as with the eight-inch lens, hence the light which acts on the larger plate is one over two squared, or one-fourth as strong as the light which acts on the smaller plate. In other words, the larger lens at f/8 delivers to the plate four units of light which are each one fourth the intensity of the single unit delivered to the smaller plate by the smaller lens at f/8, with exactly the same result in so far as light action is concerned. We may call this product of quantity and intensity of light, the light moment as analogous to the moment of a force, the product of the force multiplied by its distance from the fulcrum.

So we see that the f/number indicates the value of the light moment or speed of a lens no matter what its focal length or size. This statement is not strictly correct because the f/number does not express directly the speed of the lens or aperture, rather as we would say mathematically, the f/number is a *function* of the speed, because the speed actually varies inversely as the *square* of the f/number. An f/2 lens is sixteen times as fast as an f/8 lens, as 64, the square of 8, is to 4, the square of 2.

This relationship between exposure speed and f/number is just as true for the pinhole aperture as it is for the lens, but with the pinhole, the diameter of the aperture is constant for different settings, the *same* size pinhole may be set eight inches from the picture plane to cover a five by seven plate at a normal angle or set sixteen inches from the plate to cover an eleven by fourteen plate at approximately the same angle. The f/number will, of course, vary with each different set-up, and the

diameter of the aperture being comparatively so small, the f/numbers are consequently quite large, difficult to remember, and as difficult to calculate mentally. From the very beginning exposure tables for pinhole work were calculated; many of these were the result of experiments and many the results of calculation based on the relation of the f/number of a given pinhole at a given distance to a common f/number of a lens.

TABLES AND CALCULATIONS

Of course, tables giving definite exposures under a few common conditions are not very valuable for two good reasons: they are at best very limited in application and cramp your hand and your ambition, and they soon become out-dated owing to constant progress and change in the making of sensitized material. One has only to consider the change since five years ago to realize how useless a definite exposure table compiled twenty-five years ago has become. Much data has been compiled, some of it simple, much of it involved, much of it misdirected and much of it helpful and useful.

The calculation of the proper pinhole exposure under any conditions of light, sensitivity of plate or film, character of subject, and setting of apparatus from a meter reading of the proper lens exposure under the same conditions of light, film and subject and any common diaphragm setting, is a simple matter of elementary mathematics, but is not to be done instantaneously. After reviewing some of the more important attempts at exposure formularization of the past, we shall give a universal formula for calculating pinhole exposures in this way, but, although this formula or equation is far from being as formidable as it looks in print, we venture to say that few photographers will actually use it. We shall, therefore, give an ultimate simplification of this formula which will enable the quick and easy determination of pinhole exposure under a wide range of conditions from any simultaneous meter reading or other exposure determination for a lens exposure. We venture to say that this simplified procedure will be used and have every hope that it will prove most helpful.

This simple formula, derived after eliminating some of the variables by substituting convenient constants for them, has been used in many experimental exposures and found both accurate and convenient.

SOME GENERAL HINTS

During the rather substantially long exposure required for most pinhole work, it is obvious that motion is apt to create the most havoc

and in outdoor work a breezy or windy day is the worst day for pinhole work. A light breeze will do no harm for the moving leaves, time and again, will come back to their normal still position and with a prolonged exposure their image will be a sort of composite average. It is often advisable to use a larger pinhole and consequently shorter exposure; the results will be softer, but less blurred by motion and really have more character and definition. The camera should always be set up very rigidly so as to avoid any possible vibration from wind or perhaps heavy traffic. Where moving traffic of vehicles or pedestrians are to be eliminated, as in street views, the smaller the pinhole and the longer the exposure, within reason, the better. On the other hand, the exposures should not be so long that the definition of the edges of shadows is lost on account of their progressive change in position. For some subjects, therefore, a gray day with diffused light is best.

THOMSON'S DATA

In THE PHOTO-MINIATURE: No. 27, Old Series, published in 1901 the Rev. J. B. Thomson gives a rather elaborate exposure chart, adjustable as to time of year and time of day, for subjects divided into four groups, and for the "most rapid plates"—a most indefinite factor—for perfect sunshine, for No. 10 needle-hole and four inches distance from pinhole to plate, with a list of factors to be used in adjusting the exposures found to variations in plate, various pinhole distances, and light conditions. The adjustment for variations in plate to pinhole distance is quite crude, but, on the whole, the table seems to work out with fair accuracy if we assume that the current "chrome" films are about twice as fast as the 1901 "most rapid plates."

D'ARCY POWER'S FORMULA

In THE PHOTO-MINIATURE: No. 70, Old Series, Dr. H. D'Arcy Power formulates a new method of calculating exposure, ultimately combined with the use of a Watkins exposure meter. His method was based on the discovery by experiment that a photograph which required an exposure of one second with a lens at f/32, required an exposure of sixty seconds with a No. 11 needle-hole at eleven inches from the plate. It must have taken a deal of experiment to get this result.

It is quite accurate, however, for outdoor conditions of light which reaches the film through the pinhole without having passed through glass whether in lens or window. For ordinary glass is more or less opaque to ultra-violet rays, and it has been substantiated by later experiments that such unscreened and unadulterated light is approximately

eight times as active actinically as light which has passed through glass and been deprived of most of its ultra-violet.

The f/number of a No. 11 pinhole at 11 inches is 11 divided by 1/65, its diameter, or 715. Its speed as compared to an f/32 opening would normally and with the same quality of light be as the square of 32 is to the square of 715, or as 1 to 497; that experience shows its speed is as 1 to 60, proves that the light reaching the film through the pinhole is 497 divided by 60, or approximately 8 times as potent as the light reaching the film through the glass lens. Many exposure experiments with pinholes substantiate this. Dr. Power's exposure calculations will not hold good on interiors where the light has passed through windows, or by artificial light.

After Dr. Power found to his own satisfaction that a pinhole exposure with a No. 11 needle-hole at 11 inches was 60 times the required exposure under the same conditions with a lens at f/32, he proceeded to make this finding the basis of a formula for simple calculation of pinhole exposures under varying conditions. In order to do this, Dr. Power abandoned the rating of pinhole apertures by needle sizes and devised a series of apertures numbered from 1 to 5 and varying from 1 mm. to ¼ mm. in diameter and so arranged that each succeeding number of aperture was half the *area* of its preceding neighbor and passed half the amount of light.

In some way, Dr. Power evolved the rule that the number of the aperture multiplied by the distance of the aperture from the plate in inches gave the f-value of the aperture if the corresponding meter indication of exposure were read in minutes instead of in seconds. This is quite variable in its accuracy despite Dr. Power's protestations that it works uniformly.

Aside from the question of accuracy, in adopting aperture sizes in fractions of a millimetre instead of needle sizes for the sake of simplicity, Dr. Power has immediately relegated the making of such apertures to makers of precision instruments. Very few, if any, amateur craftsmen have the facilities or ability to make such apertures and to measure them, while satisfactory needle-holes of known sizes can be and have been made by veritable tyros. As for the variation in the sizes of needles from various manufacturers, this variation is less than the error involved in the round fractions adopted for the numbered aperture diameters by Dr. Power. Fortunately for all of us, modern film has much latitude as to exposure and an error here and there is absorbed.

We shall now develop a universal formula for pinhole exposures under any conditions, and from this universal formula we shall derive a simplified one for quick use under common conditions.

PINHOLE EXPOSURE FORMULA:

The following symbols are used in the general formula:

"d" is the diameter of the pinhole aperture in fraction of an inch. (No. 8 needle is 1/45″ in diameter; No. 10, 1/55″; No. 11, 1/65″, No. 12, 1/75″.)

"D" is the distance from pinhole to plate or film in inches.

"P" is the f/number of pinhole aperture ($P = D/d$).

"L" is the f/number assumed in ascertaining proper lens exposure by exposure meter, chart or other device, to be used as basis for calculating pinhole exposure.

"E" is proper lens exposure at f/L ascertained by meter or other device.

"e" is the pinhole exposure required.

As has been said, it has been proven by experiment that light coming directly from the sun without passing through glass (window or lens) is eight times as strong in actinic effect as sunlight which has passed through glass, which is partly opaque to ultra-violet rays.

Therefore, for outdoors in daylight with light coming directly from sun without passing through glass, e equals ⅛ of E times $(P/L)^2$, or

e equals E times ⅛ of $(D/dL)^2$.

For indoor work where light passes through window glass or with artificial light:

e equals E times $(D/dL)^2$.

For field use we can simplify the formula by assuming L equal to 32 and always take the meter reading for f/32 and also calculate the exposure for No. 10 pinhole, 1/55″ in diameter. The formula then becomes:

e equals E times ⅛ of $(55/32D)^2$, or

for indoors,

e equals E times $(55/32D)^2$, or

approximately e equals E times $3/8D^2$, and for indoors, approximately e equals E times $3D^2$, all when using a No. 10 pinhole.

Having found the exposure for the No. 10 aperture, it will be near enough to use 1/3 less for the No. 8 needlehole, ½ more for the No. 11 and double for the No. 12. Modern film has much latitude in exposure, especially on the over side, and we need not bother with minute fractions in calculating exposures.

Let us work out an actual exposure problem by the full formula and by the short one, and see how much variation there is.

The exposure is to be outdoors in daylight with a No. 12 pinhole,

5 inches from film, so then d = 1/75, D = 5, and L = 32, E at f/32 is found to be ½ second, substituting these values in e = E times ⅛ of $(D/dL)^2$ we find that e = ½ x ⅛ x $(375/32)^2$ = 1/16 (11 and $23/32)^2$, approximately 1/16 $(12)^2$ = 9 seconds.

Using the short formula, we find for a No. 10 aperture, e= E x ⅜ D^2 or ½ x ⅜ x 25 or 75/16 or 4 11/16 seconds, doubling this for the No. 12 pinhole we get 9⅜ or 9 in round numbers.

THE ULTIMATE SIMPLIFICATION

We can still further simplify this calculation by solving the short formula for a unit distance, calling D equal to 1. The result, multiplied by E and the square of the pinhole distance used, will give us "e" for the No. 10 pinhole, from which may easily be calculated the corresponding exposure time for the other apertures. Calling D equals 1 in e = E times ⅜ D^2, we get e = ⅜E that is with a No. 10 pinhole at a distance of 1 inch from the plate the pinhole exposure equals ⅜ of lens exposure at f/32. We only have to multiply this by the square of the actual extension used to get the exposure for that extension and again with factors given above to get the exposure for apertures other than No. 10. For indoor work, the ultimate simple formula becomes e = 3E, where "e" is calculated for a No. 10 pinhole at 1 inch distance from the film and E is calculated at f/32.

For some readers not accustomed to mathematical formulas and their manipulation, this simple procedure may be better put into words. To calculate a pinhole exposure, then, first find the proper exposure at f/32 for the subject, light conditions, and film involved, using an exposure meter, chart or any device to which you are accustomed (a good extinction or photo electric meter is the best), and for exposures in the open in direct light multiply this meter reading by ⅜; for indoors or artificial light multiply the meter reading by three. This product should then be multiplied by the square of the pinhole-to-film distance in inches. The result will be the proper exposure for a No. 10 needle hole or pinhole. For a No. 8 pinhole decrease this exposure by 1/3. For a No. 11 pinhole increase it by ½, and for a No. 12 pinhole, double it.

This is the simplest accurate method of pinhole exposure calculation yet proposed.

BEN J. LUBSCHEZ

TEACHING PHOTOGRAPHY WITH A PINHOLE CAMERA

[Having several times acted as counsellor to the Camera Club at the Fieldston School of the Ethical Culture Society, and being impressed with the seriousness of many of the workers, I asked Mrs. M. E. Munzer, Instructor in Laboratory Chemistry and in charge of the Camera Club of the school, to write down something of how the interest in photography was aroused and fostered at the school. The article deals almost entirely with the simplest form of pinhole photography, Eastman experimental box cameras being used, and so is appropriately included herewith.] B. J. L.

Many youngsters are fascinated by photography, by the actual taking of picture after picture, and a cheap camera is usually provided by a fond parent and the child is turned loose to snap pictures of Mary, Sue or the dog. When the finished prints return from the drugstore, three are usually out of focus, three are blank and the remaining two are rather unflattering representations of friends. The young photographer, however, continues his "snapping" unabashed. He begins to consider the possibility of converting the bathroom into a dark-room. He is greeted by howls of disapproval from the other members of the family. But the photography bug has bitten him, and he decides that if he is thwarted at home, he will join the Camera Club at school.

The teacher of such a club has an opportunity to use this initial interest of the child, and develop it into a real skill and possibly a life-long hobby. But he must start at the very beginning, and simplify the subject as much as possible. "How does a camera work?" is the natural question which first arises. "How would you like to make your own camera?" says the teacher, "and we'll see how it is built and how it works as we go along."

Each pupil is given a package in which are all the materials necessary to build a pinhole camera. He learns as he constructs it that it is necessary to tape all joints in order that the box be light-tight. He adds a film holder to the box and finally a pinhole and shutter. He tests the camera by holding it to the light, and notices that the only place which allows the light to enter is the tiny hole. He is a bit skeptical of the picture-taking ability of such a contraption.

When the camera is complete, he is ready to load it. Before loading the camera, the teacher places a piece of tissue paper over the back, darkens the room, and lets the rays of light from a candle pass through the pinhole to the paper screen. Some pupil at once remarks, "Why, the candle is upside down!" This gives the teacher the necessary

opportunity for explaining something about how light travels, and how an image is formed on the screen or film.

At last the camera is loaded, a rubber band snapped around it and over the shutter to protect the pinhole, and the student is ready to go out of doors to take his first picture. Now comes the chance to explain a little about composition, for the first picture must be a masterpiece. "How do we know what's going to be in the picture when there isn't a finder?" and he proceeds to show how one can sight along the guide lines, determining quite accurately the range of the picture.

Next comes the question of exposure. The exposure chart is studied and students are taught to distinguish between the various exposure groupings. The teacher sometimes brings a number of pictures with him and the class studies them for the exposure group as well as for composition.

After the picture is taken, the student is ready to learn development. He has the advantage of being taught this process with one piece of cut film, rather than with a whole roll. Then, of course, comes instruction in printing, and finally the student has in his possession a picture made entirely by himself "from camera to print."

The very fact that it takes considerable time to adjust the camera to take the desired picture is a great advantage to the beginner. The temptation of an ordinary camera, especially with children, is to snap quickly without giving sufficient thought to the result of the snapping.

After the technique of picture-taking, developing and printing have been well started, the teacher gradually helps the pupils to use more complicated cameras. The teacher explains how the essentials of any kind of camera are represented in the pinhole camera; the light-tight box, the pinhole which serves in place of a lens, the guide lines which serve as finder or ground glass. The more intellectually curious will want to learn something about lenses and their operation and advantages.

Since the student has now learned to study his subject before taking a picture, he will be less apt to use his more elaborate camera carelessly. He knows how to develop a piece of cut film, and has had all the thrill of seeing an image appear from nothingness.

It will not be long before he insists on that bathroom-darkroom at home, and probably the family will concede him the right, now that they see his desire turning from a whim into a hobby. The youngster, who now has sufficient background for the undertaking, is at least fairly launched on his adventures in photography, and he began with only a paper box and a pinhole!

MARTHA E. MUNZER.